5/24/2017 13:36
IP_PWP:d0695342\Precast Panel Detour Bridge 09.dgn

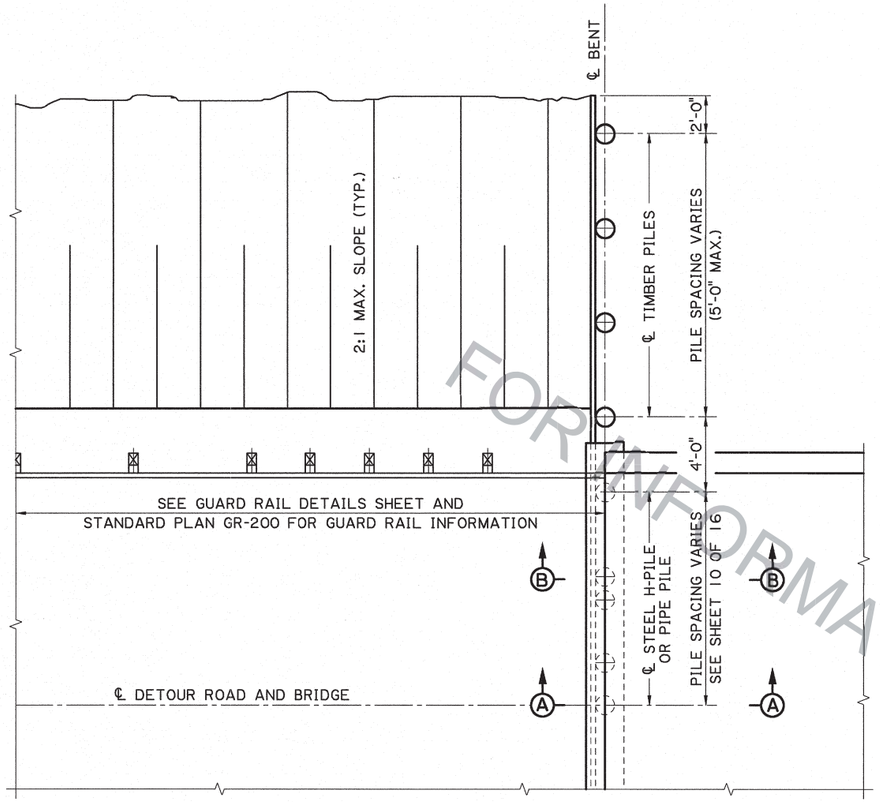

HALF PLAN

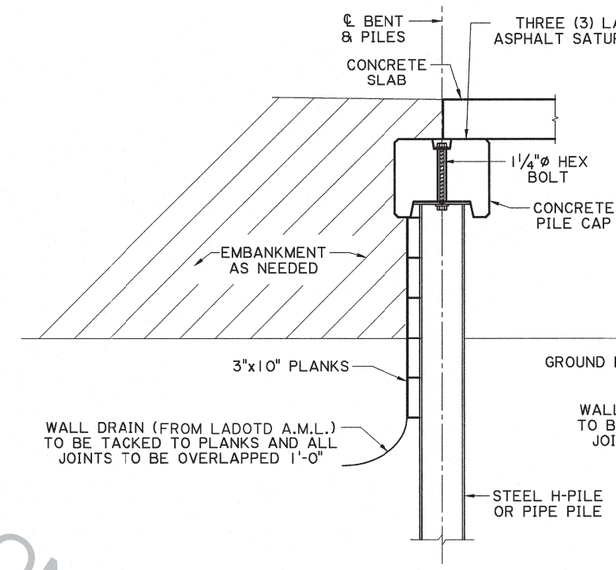

SECTION A-A

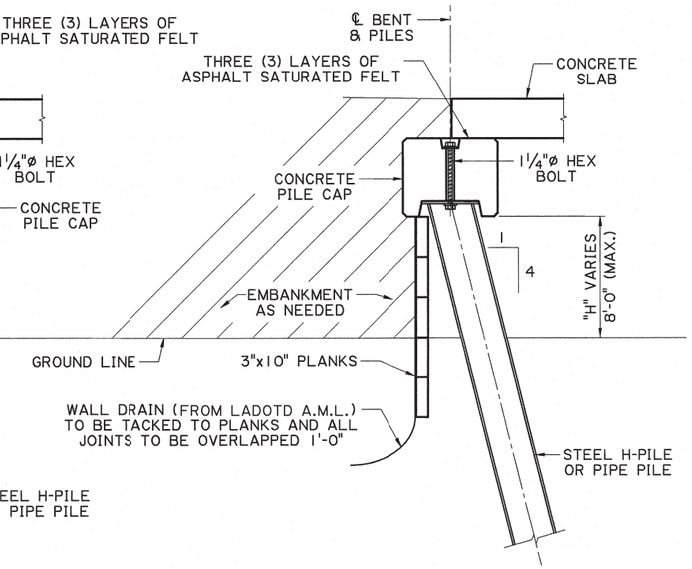

SECTION B-B

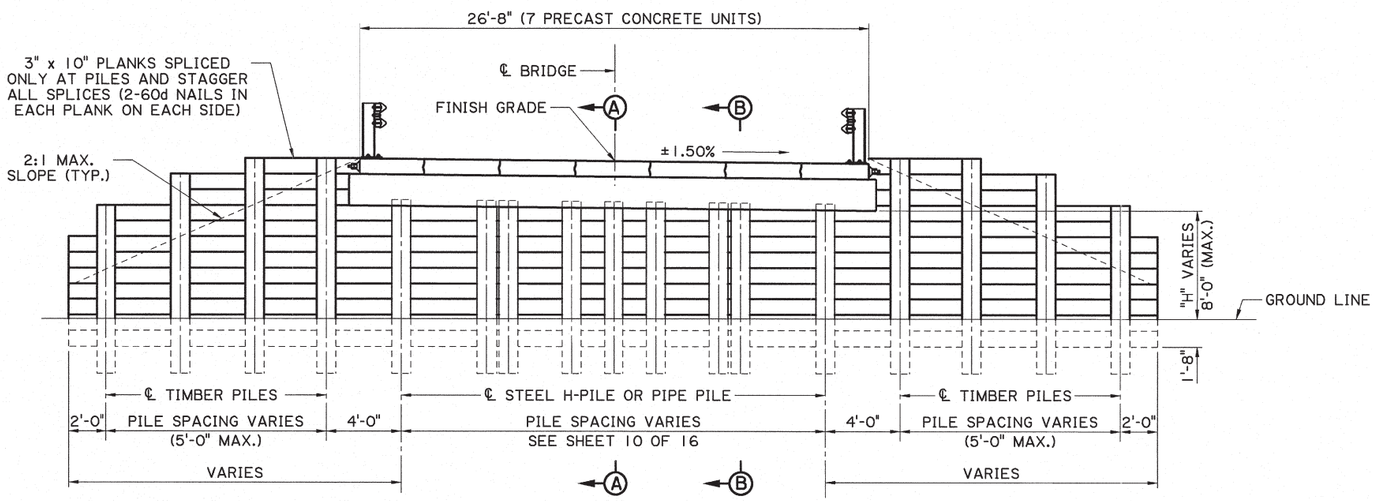

ELEVATION
SHOWING BULKHEAD

FOR INFORMATIONAL PURPOSES ONLY

STATE OF LOUISIANA
JUSTIN C. PELTIER
License No. 34765
PROFESSIONAL ENGINEER
IN
CIVIL ENGINEERING
2/25/2013

SHEET NUMBER	
PARISH	
CONTROL SECTION	
STATE PROJECT	
DESIGNED J. PELTIER / CHECKED M. HEBERT	
DETAILED J. PELTIER / CHECKED M. HEBERT	
REVIEWED P. VAUGHT / SERIES # 9 OF 16	
K.M.B. / BY	
0 / NO.	03-01-17 / DATE	UPDATED FOR 2016 SPECIFICATIONS / REVISION OR CHANGE ORDER DESCRIPTION

END BENT TYPE "B" DETAILS

BD.2.8.1.0.09 PRECAST PANEL DETOUR BRIDGE

BRIDGE & STRUCTURAL DESIGN